GIA

GIA REPORT
2235981759

Verify this report at GIA.edu

FACSIMILE
This is a digital representation of the original GIA Report. This representation might not be accepted in lieu of the original GIA Report in certain circumstances. The original GIA Report includes certain security features which are not reproducible on this facsimile.

GIA NATURAL COLORED DIAMOND REPORT

July 14, 2026

Report Type ..... Grading Report

GIA Report Number 2235981759

Shape and Cutting Style . Cut-Cornered Square Modified Brilliant

Measurements ..... 3.13 x 3.06 x 2.02 mm

Carat Weight ..... 0.17 carat

Color Grade ..... Fancy Intense Purple

Color Origin ..... Natural

Color Distribution ..... Even

Clarity Grade I3

Proportions:

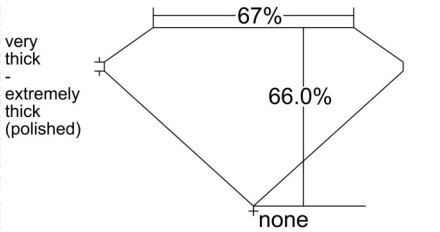

Profile not to actual proportions

Polish ..... Good

Symmetry ..... Fair

Fluorescence ..... None

Comments: Reflecting surface graining is not shown.

Additional extra facets are not shown.

ADDITIONAL INFORMATION

GIA COLORED DIAMOND SCALE

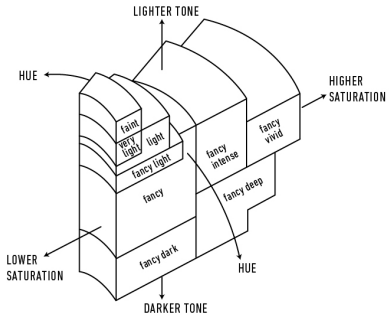

Illustration of GIA fancy color grade interrelationships

GIA CLARITY SCALE

CLARITY CHARACTERISTICS

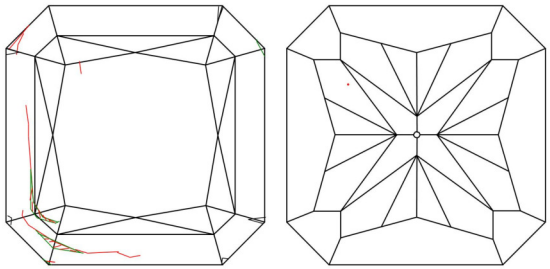

KEY TO SYMBOLS*

- Feather
- Extra Facet
- Cavity
- Pinpoint
- Natural

* Red symbols denote internal characteristics (inclusions). Green or black symbols denote external characteristics (blemishes). Diagram is an approximate representation of the diamond, and symbols shown indicate type, position, and approximate size of clarity characteristics. All clarity characteristics may not be shown. Details of finish are not shown.

The results documented in this report refer only to the diamond described, and were obtained using the techniques and equipment available to GIA at the time of examination. This report is not a guarantee or valuation. For additional information and important limitations and disclaimers, please see GIA.edu/terms or call +1 800 421 7250 or +1 760 603 4500.

©2023 Gemological Institute of America, Inc.

reportcheck.gia.edu

THE SECURITY FEATURES IN THIS DOCUMENT, INCLUDING THE HOLOGRAM, SECURITY SCREEN AND MICROPRINT LINES, IN ADDITION TO THOSE NOT LISTED, EXCEED DOCUMENT SECURITY INDUSTRY GUIDELINES.