GIA

GIA REPORT
2175548607

Verify this report at gia.edu

FACSIMILE
This is a digital representation of the original GIA Report. This representation might not be accepted in lieu of the original GIA Report in certain circumstances. The original GIA Report includes certain security features which are not reproducible on this facsimile.

GIA COLORED DIAMOND REPORT

April 14, 2016

Report Type .....Grading Report
GIA Report Number 2175548607
Shape and Cutting Style ..... Cut-Cornered Rectangular Modified Brilliant
Measurements ..... 5.09 x 4.13 x 2.82 mm

Carat Weight ..... 0.51 carat
Color Grade ..... Fancy Deep Brownish Greenish Yellow
Color Origin ..... Natural
Color Distribution ..... Even
Clarity Grade SI1
Proportions:

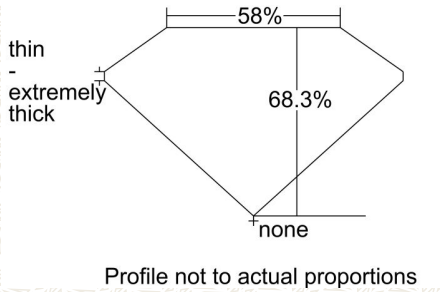

Profile not to actual proportions

Polish ..... Good
Symmetry ..... Good
Fluorescence ..... None
Comments: Internal graining is not shown. Surface graining is not shown.

ADDITIONAL INFORMATION

GIA COLORED DIAMOND SCALE

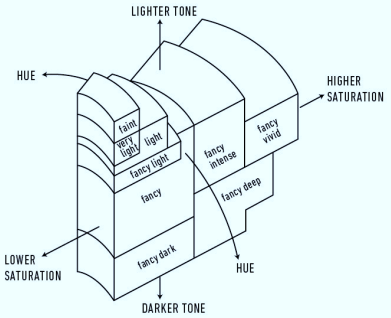

Illustration of GIA fancy color grade interrelationships

GIA CLARITY SCALE

CLARITY CHARACTERISTICS

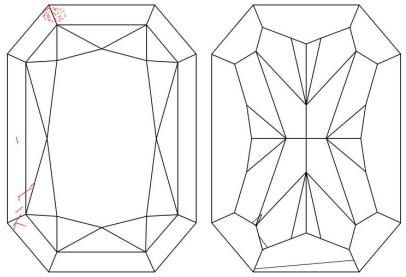

KEY TO SYMBOLS*

- Feather
- Extra Facet
- Crystal
- Cloud
- Needle

* Red symbols denote internal characteristics (inclusions). Green or black symbols denote external characteristics (blemishes). Diagram is an approximate representation of the diamond, and symbols shown indicate type, position, and approximate size of clarity characteristics. All clarity characteristics may not be shown. Details of finish are not shown.

reportcheck.gia.edu

The results documented in this report refer only to the diamond described, and were obtained using the techniques and equipment used by GIA at the time of examination. This report is not a guarantee or valuation. For additional information and important limitations and disclaimers, please see www.gia.edu/terms or call +1 800 421 7250 or +1 760 603 4500. ©2014 Gemological Institute of America, Inc.

THE SECURITY FEATURES IN THIS DOCUMENT, INCLUDING THE HOLOGRAM, SECURITY SCREEN AND MICROPRINT LINES, IN ADDITION TO THOSE NOT LISTED, EXCEED DOCUMENT SECURITY INDUSTRY GUIDELINES.