GIA
GEMOLOGICAL INSTITUTE OF AMERICA®

Facsimile

5355 Armada Drive | Carlsbad, CA 92008-4602
T: 760-603-4500 | F: 760-603-1814
GIA Laboratories
Bangkok Carlsbad Gaborone
Johannesburg Mumbai New York
www.gia.edu

## COLORED DIAMOND IDENTIFICATION AND ORIGIN REPORT

GIA REPORT 6157576409

August 06, 2013

Shape and Cutting Style ..... **Cushion Modified Brilliant**
Measurements ..... **9.91 x 8.23 x 5.75 mm**

Weight ..... **4.03 carat**

Color Grade
Origin ..... **NATURAL**
Grade ..... **FANCY DARK**
..... **BROWN-GREENISH YELLOW**
Distribution ..... **EVEN**

Comments:
The color of this stone changes temporarily when gently heated, or when left in darkness for a period of time and is known in the trade as "CHAMELEON".

GIA
COLORED
DIAMOND
SCALE

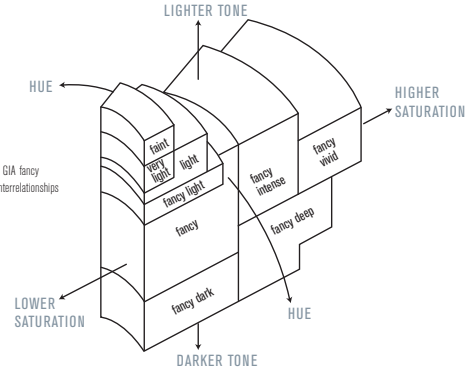


Illustration of GIA fancy color grade interrelationships

210119962433

This is a digital representation of the original GIA Report. To verify the information herein, please refer to reportcheck.gia.edu. This Report is not a guarantee, valuation or appraisal and contains only the characteristics of the diamond described herein after it has been graded, tested, examined and analyzed by the laboratory providing this Report ("GIA") and/or has been inscribed using the techniques and equipment used by GIA at the time of the examination and/or inscription. Inscriptions reported in this document are not a guarantee, validation, or warranty of a diamond's quality, country of origin or source; or that the diamond will be identifiable by the inscription in the future (since inscriptions can be removed). GIA makes no representation concerning any trademark, word, or symbol which is inscribed by GIA or which is identified on this Report. The recipient of this Report may wish to consult a credentialed jeweler or gemologist about the information contained herein.

The security features in this document exceed document security industry guidelines.

©2010 GEMOLOGICAL INSTITUTE OF AMERICA, INC.

For terms, conditions, and limitations, see www.gia.edu/terms or call 800-421-7250 or 760-603-4500.